OA205AP IP Rated
All Metal Series

AC Fans - 115, 230V
205mm x 205mm x 72mm
(8.0” x 8.0” x 2.8”)

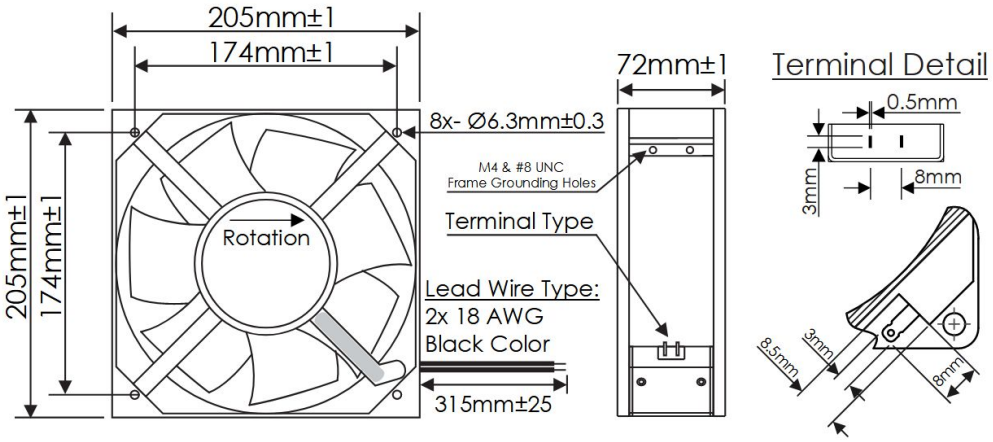

Frame	Die Cast Aluminum, Black
Impeller	Steel Alloy, All Metal, 7 Blade
Connection	Lead Wires, 300mm 18 AWG, or Terminals
Motor	AC, Capacitor Induction, Single Phase, Thermally Protected, IP68 or IP69K
Bearing System	Dual Ball Bearings
Dielectric Strength	1500VAC/min, <5mA
Insulation Resistance	≥10MΩ @ 500V DC

Operating Temperature
-30°C ~ +80°C

Storage Temperature
-40°C ~ +100°C

Life Expectancy
50,000 Hours (L10 at 55°C)

Available Options
Tachometer Output
Alarm Output

Weight: 5.18 lbs.

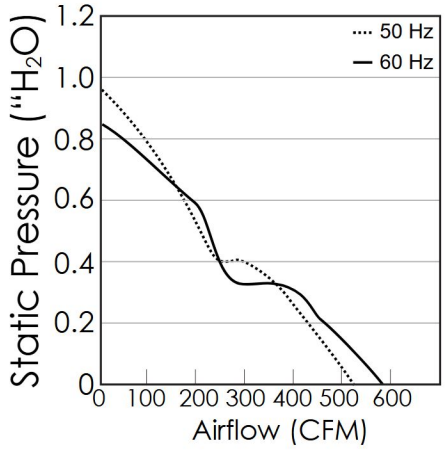

Part Number	Rated Voltage (Volts AC)	Voltage Range (Volts AC)	Input Power (Watts)	Frequency (Hertz)	Rated Speed (RPM)	Max Airflow (CFM)	Noise Level (dBA)	Max Static Pressure (”H_2O)
OA205AP-11-1*B18*xxx*	115	100 ~ 130	60 / 80	50 / 60	2750 / 3000	520 / 590	67.4	0.91 / 0.86
OA205AP-22-1*B18*xxx*	230	200 ~ 255	60 / 80	50 / 60	2750 / 3000	520 / 590	67.4	0.91 / 0.86

**Insert “T” for Terminals, or “W” for Lead Wires*
xxx Insert “68” for IP68 Rating, or “69K” for IP69K Rating

Knight Electronics, Inc.
10557 Metric Drive
Dallas, TX 75243
214-340-0265

Revised 8/2/2024
m0

E170149

Orion Fans
Information and data is subject to change without prior notification